2022 SCOTT
ADDICT eRIDE
MANUAL

SCOTT

CONTENT

THE ADDICT ERIDE SHOULD BE ADJUSTED EXACTLY TO THE RIDER FOR MAXIMUM SAFETY AND RIDEABILITY.

Please contact your authorized SCOTT dealer for advice in order to avoid technical problems or any harm.

GEOMETRY & TECHNICAL DATA	03
DROPOUTS & AXLES	04
REAR BRAKE DISC MOUNTING	06
CONTROL & RANGE EXTENDER	07
CHARGER & DISPLAY	08
HEADSET OPTIONS	09
STEM / SEATPOST / CABLE GUIDE OPTIONS	10
MANUFACTURE'S GUARANTEE	11

Before taking delivery of your new Addict eRIDE, please make sure you understand how the bike functions in regard to the drive system, battery, and controls.

Your Authorized Scott Dealer can explain how the bike functions, and how the consumer APP (ITunes & Android) is connected to the system.

APPLE STORE

GOOGLE PLAY

TORQUE REQUIRED

NO GREASE REQUIRED

GREASE REQUIRED

THREADLOC REQUIRED

BEARING FIT REQUIRED

T2 **TORX TOOL SIZE**

10 Nm **TORQUE AMOUNT**

TASK DIFFICULTY

3 **HEX TOOL SIZE**

GEOMETRY & TECHNICAL DATA

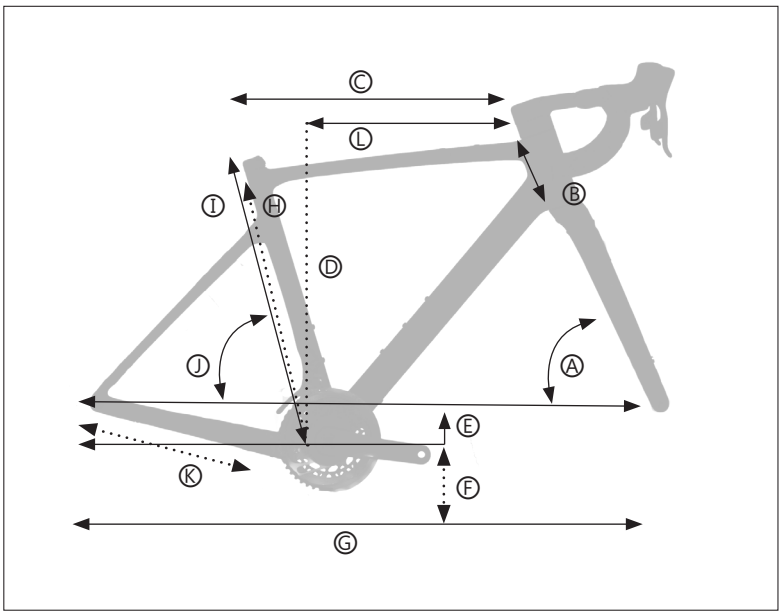

Max/Min Rotor Size:

- Front 160mm Only
- Rear 160mm Only

Max Rotor bolt size:

10mm (standard disc bolt length)

Max Tyre Size:

32mm

	MY22 ADDICT eRIDE	XS	SM	MED	LG	XL
A	Head tube angle	71°	72°	72.5°	73°	73.3°
B	Head tube length	105 mm	125 mm	145 mm	165 mm	185 mm
C	Top tube horizontal	515 mm	530 mm	545 mm	560 mm	575 mm
D	standover height	752 mm	776 mm	799 mm	822 mm	843 mm
E	BB offset	-70 mm	-70 mm	-70 mm	-70 mm	-70 mm
F	BB height	279 mm	279 mm	279 mm	279 mm	279 mm
G	Wheelbase	995.1 mm	997 mm	1002.6 mm	1007.5 mm	1014.8 mm
H	BB center to top tube center	435 mm	460 mm	485 mm	510 mm	535 mm
I	BB center to top of seat tube	490 mm	520 mm	540 mm	560 mm	580 mm
J	Seat angle	75°	74.5°	74°	73.5°	73.1°
K	Chainstay	422 mm	422 mm	422 mm	422 mm	422 mm
L	Reach	373.2 mm	377 mm	380.9 mm	384.3 mm	388.6 mm
	Stack	529.1 mm	551.6 mm	572.4 mm	593.3 mm	613.6 mm
	Fork Rake	45°	45°	45°	45°	45°

DROPOUTS & AXLES

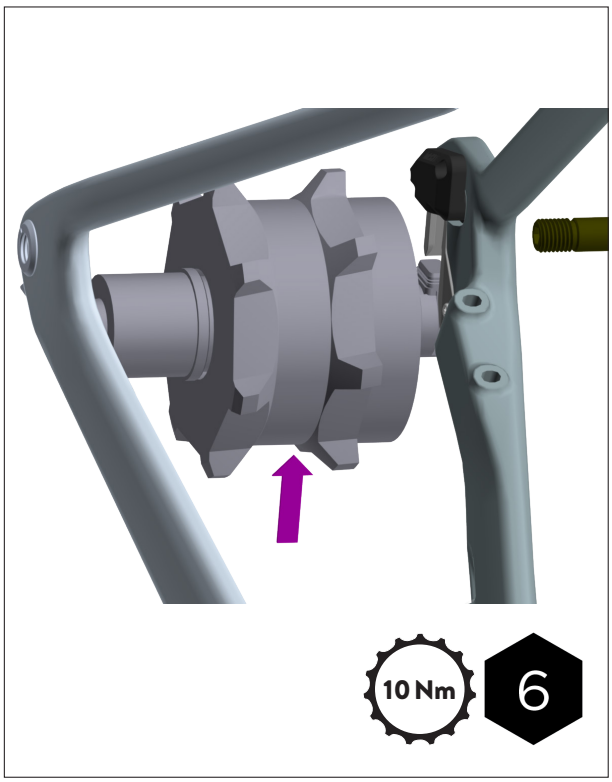

The X20 features a new rear hub motor with a 12x142 mm axle.

The X20 features an easy slip in system of the wheel. This means the motor auto connects with the system when the rear wheel is inserted into the dropout.

Make sure the hub sensor is clean & located correctly into the dropout.

290053 SCO eRIDE Mahle Addict Dropout L/H/S 22

For the right-hand side drop out hanger the frame features the same dropouts' option as the Addict RC.

277030 SCO Axle rear Addict RC/ Plasma 6 20

DROPOUTS & AXLES cont.

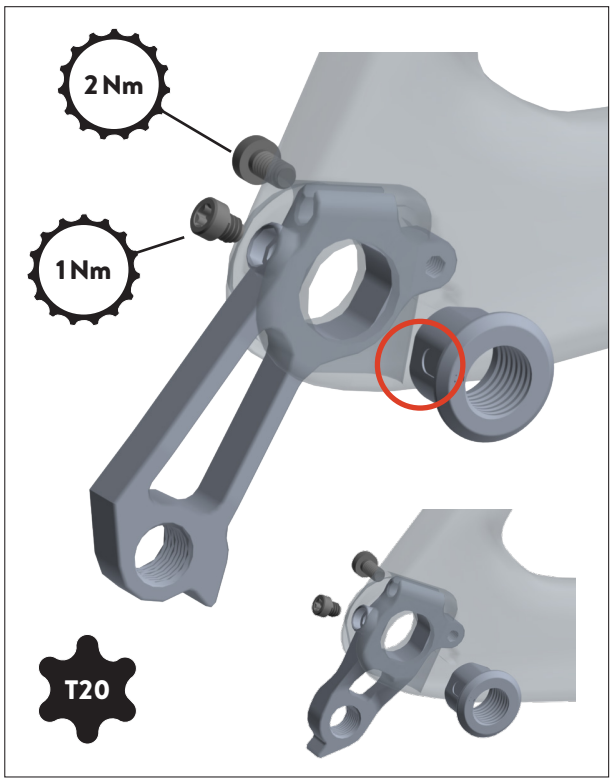

part number:

277544 SCO Dropout Addict RC 20

277545 SCO Dropout Addict RC direct mount 20

part number:

277028 SCO Axle Front Addict RC/Plasma 6 TP 20

REAR BRAKE DISC MOUNTING

PLEASE TAKE EXTRA CARE WHEN INSTALLING THE REAR DISC ROTOR AS THE ROTOR WILL HAVE A TIGHT FIT WHEN INSTALLING IT OVER THE MOTOR CONNECTOR.

**TAKE NOTE OF THE CORRECT DISC ROTOR POSITION AS HIGHLIGHTED BELOW.
ONCE THE CONNECTOR IS BEHIND THE ROTOR, THE END CAP CAN GO THROUGH THE BRAKE DISC HOLE.**

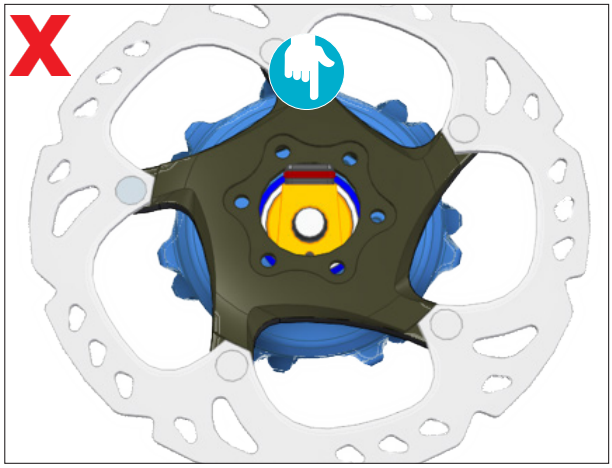

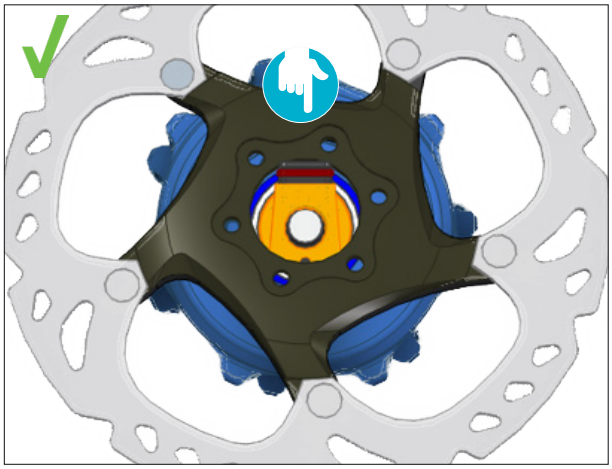

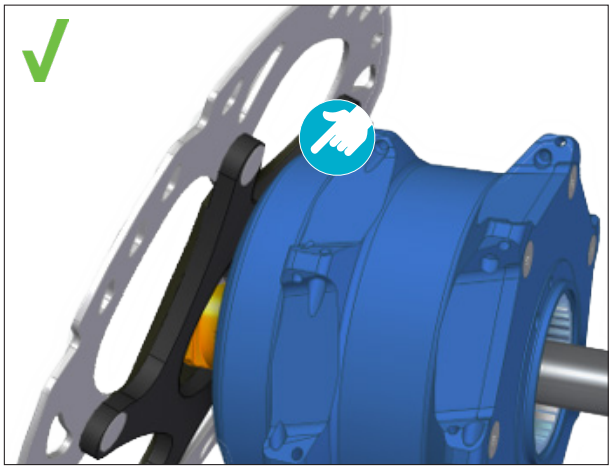

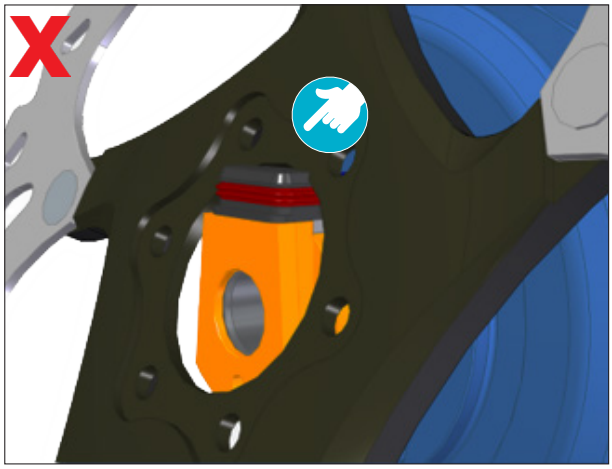

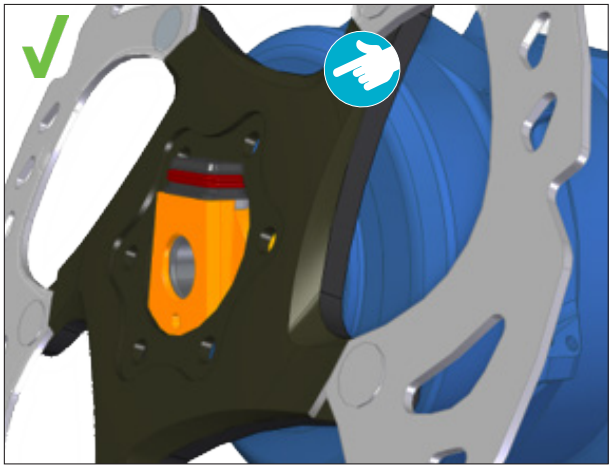

CONTROL & RANGE EXTENDER

Control Button
On/Off _ Assistance Level_Light On/ Off

Ambient Light Sensor
Adaptation of the bicycle components (lights etc).

RGB Dynamic Line
Battery Level (area filled)
Assist Level (by colour)
System Info (animation of the line)

GREY: No Assistance

GREEN: Level 1

ORANGE: Level 2

RED: Level 3

BLUE: Automatic Assistance Mode

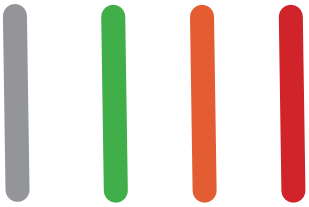

The new X20 Range Extender is a second battery (185 Wh) and direct power supply to the X20 system. This means the Range Extender can support the bike even if the internal battery has been drained of power.

The X20 and X35 are not cross compatible. The X20 Range Extender has as a new smaller size to fit any standard bottle cage on the market, no special Range Extender cage from Mahle is needed.

288538 SCO RIDE Mahle Addict Booster 2 battery

CHARGER & DISPLAY

The new Active Charger includes CAN BUS for real time communication with the battery.

This direct communication combined with a more powerful converter allows the battery to be charged at different intensities from 0 to 4.5A making the charging process faster and more efficient.

The micro USB port on the charger provides an additional connecting point which allows future updates to be made to the full eBike system directly.

The charger is not cross compatible with different systems !

294434 SCO eRIDE Mahle Addict Charger 2

The X20 system is compatible with the PulsarONE display.

285950 SCO eRIDE Mahle Addict PULSARONE display

HEADSET OPTIONS

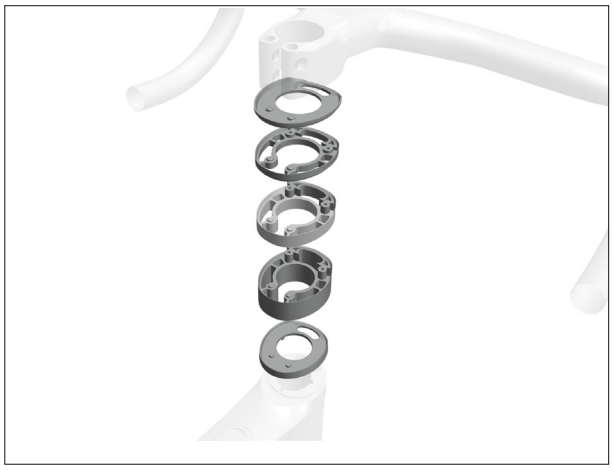

part number:

277547 SCO STEM SPACER KIT SY CREST IC

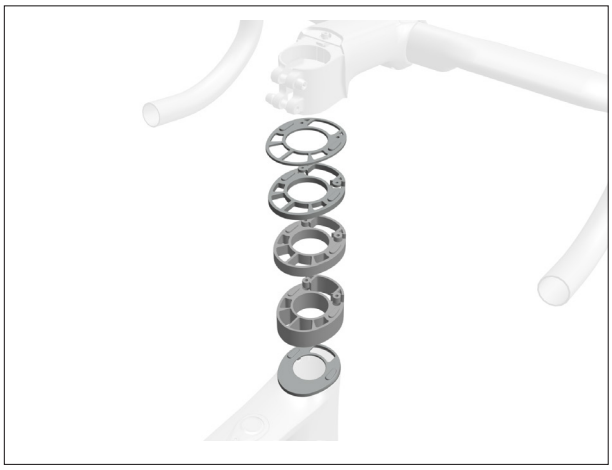

part number:

277548 SCO STEM SPACER KIT SY RR IC

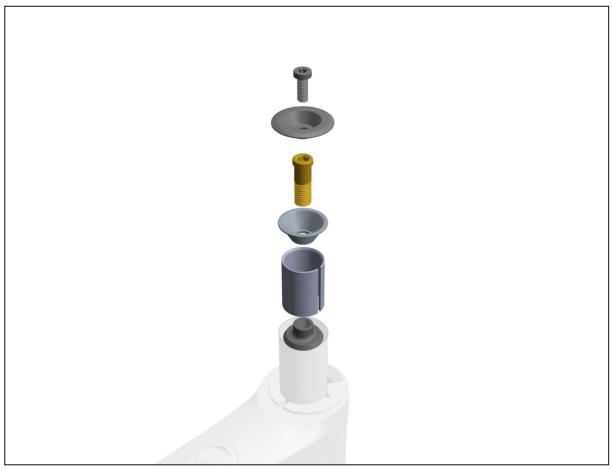

part number:

275466 SYN HEADSET IS52/31.8 - IS52/42

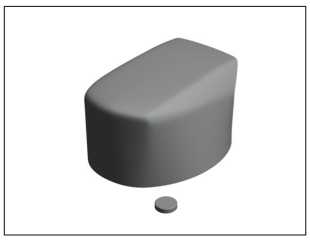

part number:

277550 SCO STEM STEERER CAP SY CREST IC

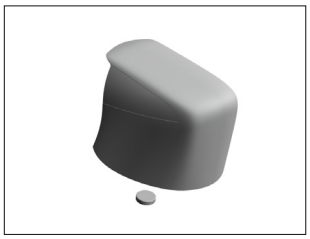

part number:

277549 SCO STEM STEERER CAP SY RR IC

STEM / SEATPOST / CABLE GUIDE OPTIONS

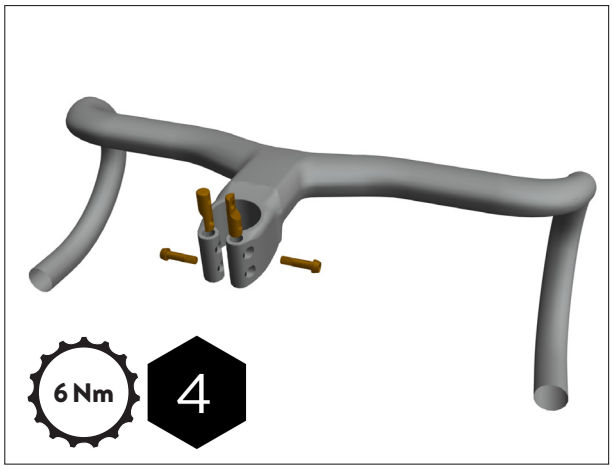

part number:

275472 SCO Stem hardware kit Fras iC, Crest iC

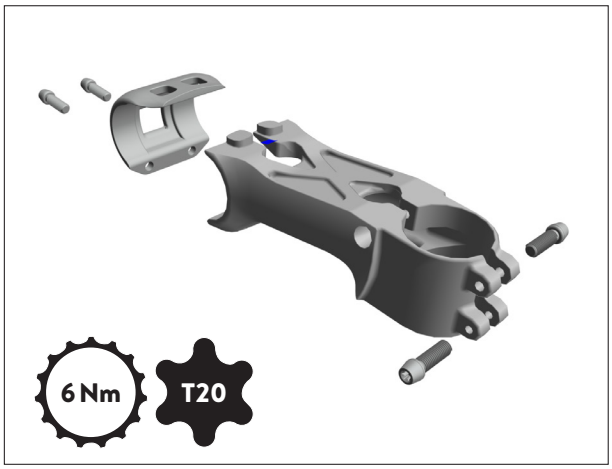

part number:

275431 SYN Stem RR 1.5

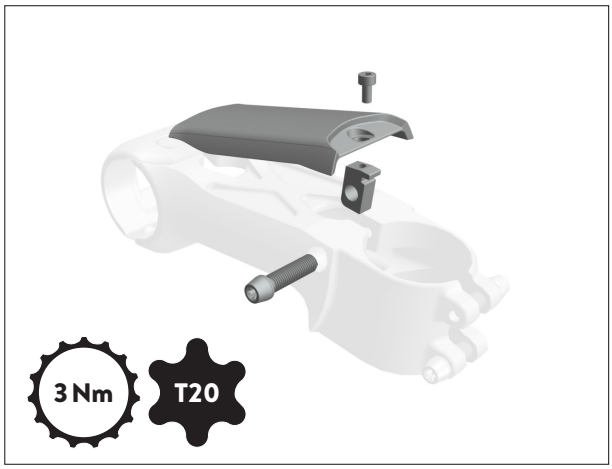

part number:

277042 SCO Stem top cover SY RR iC

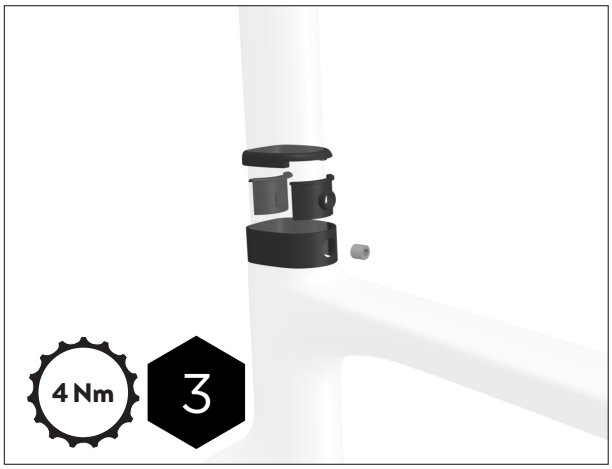

part number:

277543 SCO Seatclamp Addict RC 20

Use carbon grease on the seatpost.

Cable guide kit part number:

277025 SCO Cableguide kit Addict RC D 20

MANUFACTURER'S GUARANTEE,

When purchasing a new SCOTT bicycle from an authorized SCOTT dealer, SCOTT grants a manufacturer's guarantee subject to the following provisions.

CONDITIONS

The manufacturer's guarantee is only granted to the first-time buyer of a SCOTT bicycle who has purchased it from an authorized SCOTT dealer. The manufacturer's guarantee only applies if the bicycle is registered to the first buyer at www.scott-sports.com within ten days of purchase.

DURATION

The manufacturer's guarantee is granted from the date of purchase for a period of five years on bicycle frames and rear ends. The guarantee period is reduced to three years, if the SCOTT bicycle is not serviced at least once a year by an authorized SCOTT dealer. Maintenance services must be carried out in accordance with the maintenance instructions in the SCOTT manual and must be confirmed there by the stamp and signature of the authorized SCOTT dealer.
For frames and rear ends of Category 5 bicycle models and for rigid forks manufactured by SCOTT, the duration of the manufacturer's guarantee is limited to two years.
If a defect on the SCOTT bicycle is remedied within the scope of a manufacturer's guarantee or a warranty claim, the duration of the manufacturer's guarantee is not extended. The manufacturer's guarantee ends, when the first-time buyer transfers ownership of the SCOTT bicycle to a third person.

ASSERTION

The manufacturer's guarantee is provided by SCOTT Sports SA, Route du Crochet 11, 1762 Givisiez, Switzerland. The buyer must inspect the SCOTT bicycle immediately after purchase and notify his authorized SCOTT dealer at once in writing of any obvious defects. Hidden defects must be reported immediately after their discovery. In the event of a guarantee claim, the SCOTT bicycle must be handed over to an authorized SCOTT dealer. The latter will contact SCOTT to remedy the defect. The assertion of a guarantee claim always requires the presentation of the original proof of purchase as well as the proof of maintenance service in the SCOTT manual.
Performance of SCOTT in the event of a guarantee claim
In the event of a guarantee claim, SCOTT will, at its own discretion, repair the defect or replace the defective product with a product of similar quality, whereby colour and model deviations are possible. If a repair or replacement is not possible, a purchase price refund will be made taking into account previous use. SCOTT is entitled to commission third parties to remedy the defect.

LIMITATIONS

The manufacturer's guarantee applies exclusively to frames, swingarms and rigid forks of SCOTT bicycles. Bicycle components are excluded from this manufacturer's guarantee.
The manufacturer's guarantee does not apply to normal wear and tear, damage caused by accidents or other excessive force on the SCOTT bicycle, corrosion, improper maintenance, incorrect assembly and assembly of unsuitable components or accessories as well as cosmetic defects, for example in the varnish.
The manufacturer's guarantee does not apply to SCOTT bicycles that have been used in a rental shop.

MISCELLANEOUS

These manufacturer's guarantee provisions apply to all SCOTT bicycles as of model year 2023. Statutory warranty rights of the buyer and guarantees of component manufacturers (Shimano, SRAM etc.) remain unaffected by this manufacturer's guarantee.
The place of jurisdiction for all disputes in connection with this manufacturer's guarantee is Freiburg, Switzerland. This manufacturer's guarantee is subject to Swiss law to the exclusion of all legislation that refers to foreign law.

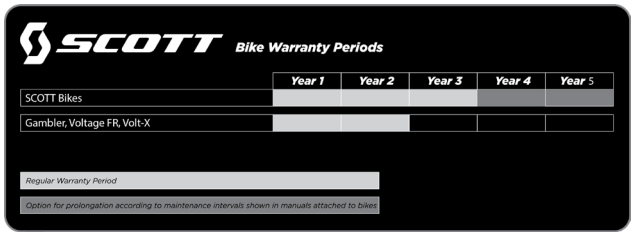

© SCOTT Sports SA 2022. All rights reserved.
The information contained in this manual is in various languages but only the English version will be relevant in case of conflict.

P.E.D Zone C1, Rue Du Kiell 60 | 6790 Aubange | BelgiumDistribution: SSG (Europe) Distribution Center SA
SCOTT Sports SA | 11 Route du Crochet | 1762 Givisiez | 2022 SCOTT Sports SA www.scott-sports.com Email:
webmaster.marketing@scott-sports.com